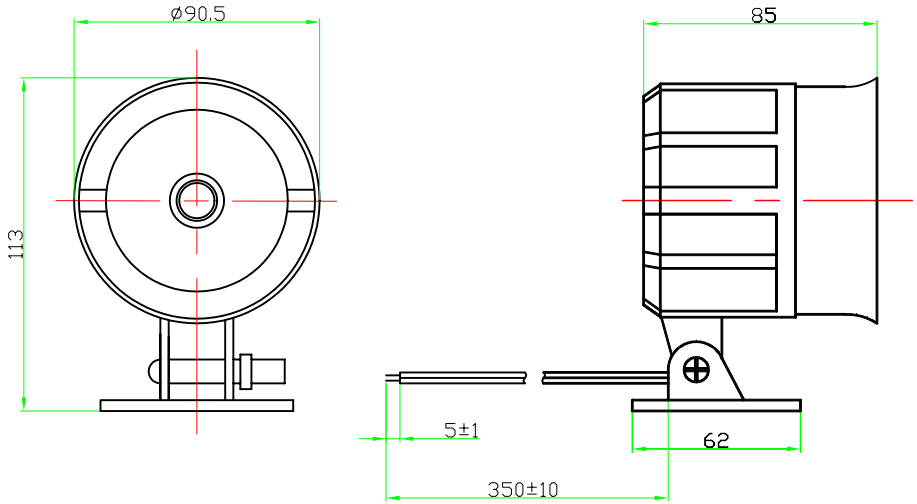

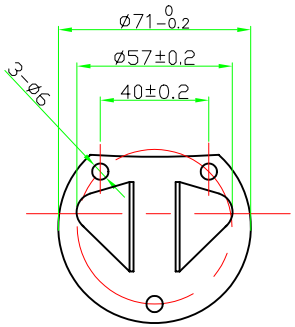

Specification (Test Condition, 25℃)

1. Housing Material/ Color..... ABS / Black
2. Rated Voltage ..... 12 VDC
3. Range Voltage ..... 6--14 VDC
4. S.P.L. ..... 110±3 dB(at 100 cm. 12VDC)
5.Tone Nature ..... Siren
6. Current Draw ..... 450mA Max.(at 12 VDC)
7. Load Test ..... 8 Hours (at 12 VDC)
8. Heat Test ..... 8 Hours (at 60℃)
9. Operating Temperature range ..... -20 ~ +60℃
10. Wires Connection ..... Red +12V
    ..... Black GND
11. Weight ..... 210 ±10 g

No.	DESCRIPTION	APPROVED	DATE

TOLERANCES UNLESS NOTED OTHERWISE
.X ±
.XX ±
.XXX ±
90° FORMED ANGLES +2° -1°

FIRST ANGLE PROJECTION

APPROVALS	DATE
DRAWN	
CHECKED	
APPROVED	04.04.26

DSW NINGBO DSW AUDIO & SECURITY EQUIPMENT
http://www.dswbrand.com fax:+86(574)87264906

Piezo Alarm
EPA-91T

UNIT	DWG NO.	
mm	E7.840.017	
SCALE NOT TO SCALE	SHEET	VER 1.0